Extraction of the Channel Mobility in InGaZnO TFTs Using Multifrequency Capacitance–Voltage Method

In-Tak Cho, Ick-Joon Park, Dongsik Kong, Dae Hwan Kim, *Member, IEEE*, Jong-Ho Lee, *Senior Member, IEEE*, Sang-Hun Song, *Member, IEEE*, and Hyuck-In Kwon

***Abstract*—In this letter, we propose a mobility-extraction method using the frequency-independent capacitances extracted from the multifrequency capacitance–voltage method in amorphous indium–gallium–zinc–oxide (a-IGZO) thin-film transistors (TFTs). This method does not use the long-channel metal–oxide–semiconductor field-effect transistor (MOSFET) current–voltage (I–V) model and can include the effect of subgap states on the calculation of the mobility. Considering that the I–V characteristics of the disordered semiconductor transistor do not exactly follow those of the long-channel MOSFET model and the subgap states significantly affect the electrical behavior of the disordered semiconductor transistors, the proposed method is expected to be useful in the extraction of the exact values of the mobilities in disordered semiconductor transistors including a-IGZO TFTs.**

***Index Terms*—Amorphous indium–gallium–zinc–oxide (a-IGZO), mobility, multifrequency capacitance–voltage (C–V) method, subgap states, thin-film transistor (TFT).**

I. Introduction

MOBILITY is one of the most important parameters which can be used to estimate the electrical performance of thin-film transistors (TFTs). Recently, amorphous indium–gallium–zinc–oxide (a-IGZO) TFTs have attracted much attention because of their various merits including higher mobility compared to amorphous-silicon TFTs [1]. In previous reports, the mobilities of a-IGZO TFTs have been mainly extracted from the linear-regime transconductance [2] or the slope in a plot of the square root of the saturation current versus gate-to-source voltage ($V_{\rm GS}$) [3]. Both extraction methods are based on the long-channel metal–oxide–semiconductor field-effect transistor (MOSFET) model. Although mobility extraction from the long-channel MOSFET model is very simple, it cannot give accurate values for the mobility in a-IGZO TFTs, because the strong gate bias dependence of the mobility in disordered semiconductor transistors due to the significant subgap states in disordered semiconductor materials cannot be properly considered in the long-channel MOSFET models [4], [5].

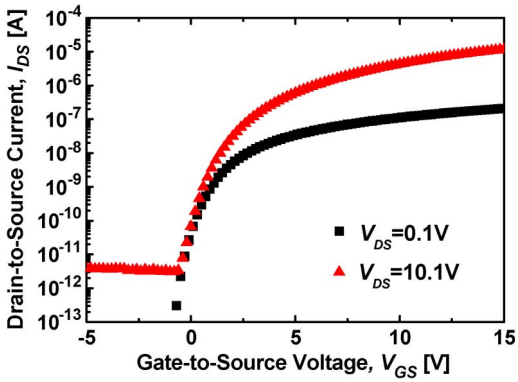

Fig. 1. Transfer characteristics of the fabricated a-IGZO TFT measured at $V_{\rm DS}$'s of 0.1 and 10.1 V.

In this letter, we extract the mobility of a-IGZO TFTs using the frequency-independent capacitances extracted from the multifrequency capacitance–voltage (C–V) method [6]. The proposed method is not based on the long-channel MOSFET model and so does not depend on the assumption that the current in the a-IGZO TFT follows the same equation as the long-channel MOSFET device.

II. Device Structure and Fabrication

The structure and detailed process sequences of the fabricated a-IGZO TFT are same as that in [6]. The channel width (W), the channel length (L), gate-to-source overlap length [$L_{\rm ov(G-S)}$], and gate-to-drain overlap length [$L_{\rm ov(G-D)}$] are designed to be $W = 200$ μm, $L = 100$ μm, $L_{\rm ov(G-S)} = 5$ μm, and $L_{\rm ov(G-D)} = 5$ μm, respectively. Fig. 1 shows the representative transfer characteristics of the fabricated a-IGZO TFT measured at drain-to-source voltages ($V_{\rm DS}$'s) of 0.1 and 10.1 V.

III. Results and Discussion

The average mobility ($\mu_{\rm avg}$) developed by Hoffman [7] has been considered as the most representative mobility which was

Manuscript received February 8, 2012; accepted March 4, 2012. Date of publication April 18, 2012; date of current version May 18, 2012. This work was supported in part by the Mid-career Researcher Program through the National Research Foundation (NRF) funded by the Ministry of Education, Science and Technology (MEST) under Grant 2011-0016971 and in part by the Basic Science Research Program through the NRF of Korea funded by MEST under Grant 2011-0004074. The review of this letter was arranged by Editor A. Flewitt.

I.-T. Cho and J.-H. Lee are with the School of Electrical Engineering and Computer Science and the Inter-University Semiconductor Research Center, Seoul National University, Seoul 151-742, Korea.

I.-J. Park, S.-H. Song, and H. -I. Kwon are with the School of Electrical and Electronics Engineering, Chung-Ang University, Seoul 156-756, Korea (e-mail: hyuckin@cau.ac.kr).

D. Kong and D.-H. Kim are with the School of Electrical Engineering, Kookmin University, Seoul 136-702, Korea.

Color versions of one or more of the figures in this letter are available online at http://ieeexplore.ieee.org.

Digital Object Identifier 10.1109/LED.2012.2190377

0741-3106/$31.00 © 2012 IEEE

derived without the assumption of the long-channel MOSFET conduction models in disordered semiconductor transistors. In Hoffman's previous report, $\mu_{\rm avg}$ was calculated using the drift-dominated charge transport theory as

$$\mu_{\rm avg}(V_{\rm GS}) = \frac{G_{\rm CH}(V_{\rm GS})}{(W/L)\cdot C_{\rm ins}\cdot[V_{\rm GS}-V_{\rm on}]} \quad (1)$$

where $G_{\rm CH}$ is the channel conductance measured as a function of $V_{\rm GS}$, $C_{\rm ins}$ is the gate insulator capacitance per unit area, and $V_{\rm on}$ is the turn-on gate voltage.

Although $\mu_{\rm avg}$ by Hoffman is easy to calculate and does not use the long-channel MOSFET models in the calculation of the mobility, it introduces nonnegligible errors because only the gate dielectric capacitance $(C_{\rm die})$ is included in the mobility calculation based on the assumption that the induced charge only exists at the channel/dielectric interface, and the effects of the subgap states are not considered in the calculation of the mobility.

To calculate the mobility based on the charge transport theory [4], it is necessary to extract the gate capacitance (C_G), from which the induced charge per unit area $(Q_{\rm ind})$ and the mobility (μ) can be calculated using the equations of

$$Q_{\rm ind}(V_{\rm GS}) = \int_{-\infty}^{V_{\rm GS}} \left(\frac{C_G}{WL}\right) dV \quad (2)$$

$$\mu = \frac{L\cdot I_{\rm DS}}{W\cdot V_{\rm DS}\cdot Q_{\rm ind}} \quad (3)$$

where $V_{\rm DS}$ is the small drain-to-source voltage which makes the channel charge density uniform across the length of the channel and $I_{\rm DS}$ is the drain-to-source current.

In single crystalline MOSFETs, C_G can be easily obtained as a function of $V_{\rm GS}$. However, it is difficult to measure the exact value of C_G in disordered semiconductor transistors like a-IGZO TFTs, because the distribution of electrons among the subgap states makes C_G strongly frequency dependent.

In this letter, we apply the multifrequency C–V method to calculate the exact value of the mobility in a-IGZO TFTs. The multifrequency C–V method was reported as an effective technique for the extraction of the subgap density of states in a-IGZO TFTs and can provide the frequency-independent capacitances due to the localized charges in the subgap states $(C_{\rm loc})$ and due to the channel free electron charges in the conduction band $(C_{\rm free})$, respectively. Fig. 2(a) shows the measurement setup for the multifrequency C–V method. The C–V responses are obtained between the gate (G) and source/drain (S/D) electrodes using an LCR meter. In this method, the frequency-independent $C_{\rm loc}$ and $C_{\rm free}$ can be extracted using the transformation procedure starting from the capacitance and resistance measured with the parallel model characterization of the LCR meter [C_M and R_M in Fig. 2(b)]. By substituting the C_M and R_M values measured at three different frequencies to the final equations derived using the transformation process from the two-element model in Fig. 2(b) to the physics-based capacitance model in Fig. 2(d) via the model in Fig. 2(c), we can extract the frequency-independent $C_{\rm free}$, $C_{\rm loc}$, and $C_{\rm die}$.

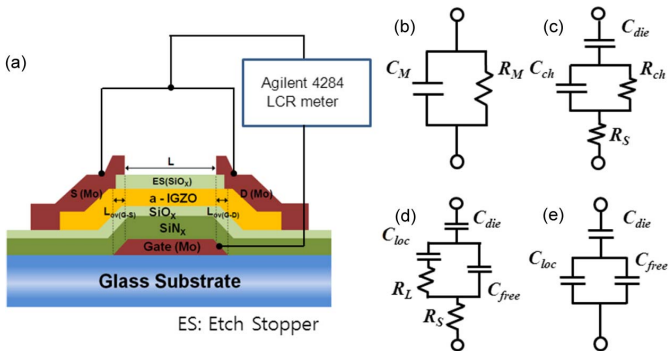

Fig. 2. (a) Schematic view and multifrequency C–V measurement setup in a-IGZO TFTs. (b) Two-element capacitance model for parallel-mode measurement of an LCR meter. C_M and R_M represent the measured capacitance and resistance, respectively. (c) Four-element capacitance model for de-embedding of $C_{\rm die}$ and R_S. $C_{\rm die}$, $C_{\rm ch}$, $R_{\rm ch}$, and R_S represent the gate dielectric capacitance, effective channel capacitance, effective channel resistance, and channel-to-S/D resistance, respectively. (d) Physics-based capacitance model with $C_{\rm die}$, $C_{\rm loc}$, R_L, $C_{\rm free}$, and R_S. $C_{\rm loc}$, $C_{\rm free}$, and R_L represent the frequency-independent capacitance due to the localized charges in the subgap states $(Q_{\rm loc})$, frequency-independent channel capacitance due to the free electron charges in the conduction band $(Q_{\rm free})$, and the equivalent resistance reflecting the retardation of $V_{\rm GS}$-responsive $Q_{\rm loc}$. (e) Equivalent model for frequency-independent $C_{\rm die}$, $C_{\rm loc}$, and $C_{\rm free}$.

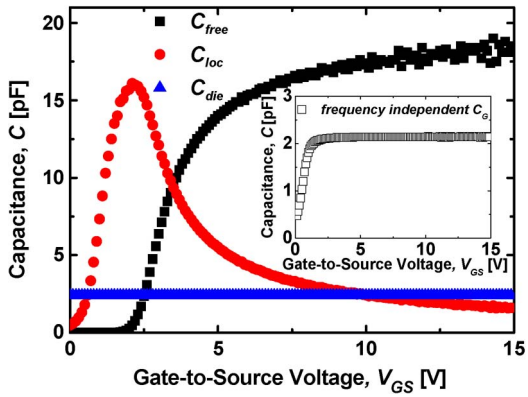

Fig. 3. Frequency-independent $C_{\rm free}$, $C_{\rm loc}$, and $C_{\rm die}$ at various V_{GS}'s extracted using the C_M's and R_M's measured at small signal frequencies of 5 kHz, 100 kHz, and 1 MHz using the multifrequency C–V method. The inset shows the frequency-independent C_G calculated from $C_{\rm free}$, $C_{\rm loc}$, and $C_{\rm die}$ with (4).

Fig. 3 shows the frequency-independent $C_{\rm free}$, $C_{\rm loc}$, and $C_{\rm die}$ at various values of $V_{\rm GS}$ extracted using the C_M's and R_M's measured at small signal frequencies of 5 kHz, 100 kHz, and 1 MHz. The extracted capacitances show that $C_{\rm loc}$ is much larger than $C_{\rm free}$ at a small $V_{\rm GS}$ but becomes smaller than $C_{\rm free}$ at a large $V_{\rm GS}$. It shows that the trapped electron charge density in the subgap states is predominant over the free electron charge density in the subthreshold region, but the free electron charge becomes dominant above the threshold region with a high $V_{\rm GS}$ in a-IGZO TFTs. In our work, the mobility is extracted by substituting the calculated C_G into (2) and (3). C_G can be simply calculated from $C_{\rm free}$, $C_{\rm loc}$, and $C_{\rm die}$ using (4) based on the equivalent circuit in Fig. 2(e)

$$C_G = \frac{C_{\rm die}\cdot(C_{\rm loc}+C_{\rm free})}{C_{\rm die}+C_{\rm loc}+C_{\rm free}}. \quad (4)$$

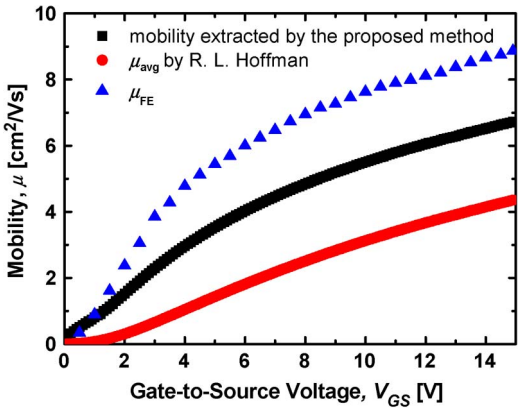

Fig. 4. Comparison of the mobilities extracted using the proposed method with $\mu_{\rm avg}$'s by Hoffman and $\mu_{\rm FE}$'s at various $V_{\rm GS}$'s.

The inset of Fig. 3 shows the frequency-independent C_G calculated from $C_{\rm free}$, $C_{\rm loc}$, and $C_{\rm die}$ with (4). One thing that we have to note in the extraction of the mobility is the effect of the G-to-S/D overlap capacitances $[C_{\rm ov(G-S/D)}]$. When we measure the capacitances using the measurement setup in Fig. 2(a), $C_{\rm ov(G-S/D)}$'s are measured with the channel capacitances, so the obtained C_G with (4) also includes $C_{\rm ov(G-S/D)}$. In our work, C_G is divided by the total area $[A_{\rm tot} = W \times (L + L_{\rm ov(G-S)} + L_{\rm ov(G-D)})]$ including the G-to-S/D overlap region, and the results are substituted to (2). This can cause a nonnegligible error in the calculation of the channel mobility when the ratio of $L_{\rm ov}$ to L is high. However, in this work, the ratio of $L_{\rm ov}$ to L of the measured device is only $\sim$0.1, so the error due to $C_{\rm ov(G-S/D)}$ is expected to be insignificant.

Fig. 4 shows the mobilities extracted using the proposed method at various $V_{\rm GS}$'s, which shows that the extracted mobility is larger than $\mu_{\rm avg}$ obtained using the method of Hoffman at a same $V_{\rm GS}$ but smaller than the field-effect mobility $(\mu_{\rm FE})$ which is calculated from the linear-regime transconductance based on the long-channel MOSFET model. Considering that only $C_{\rm die}$ is included in the calculation of $\mu_{\rm avg}$ in Hoffman's method, the results demonstrate that the channel free electron charge in the conduction band and trapped electron charge in the subgap states significantly affect the mobilities in a-IGZO TFTs. We can also note that there are differences between the mobility extracted by the proposed method and $\mu_{\rm FE}$. This can be attributed to the nonideal electrical behaviors of the a-IGZO TFTs which cannot be modeled using the long-channel MOSFET equations.

The proposed method also can be used to estimate the value of the mobility which can be obtained based on the assumption that there are no subgap states in a-IGZO TFTs. In a-IGZO TFTs, the density of the subgap states can be reduced by process optimization, so it is useful to predict the maximum value of the mobility without the subgap states. By letting $C_{\rm loc} = 0$ in (4) and substituting the calculated C_G to (2) and (3), we can obtain the maximum mobility without the subgap states in a-IGZO TFTs. In our experiment, the maximum mobilities are calculated to be 7.2 and 8.0 cm^2/V $\cdot$ s at $V_{\rm GS} = 10$ and 15 V, respectively, which are much higher than the extracted mobilities with subgap states at same $V_{\rm GS}$'s (5.5 and 6.8 cm^2/V $\cdot$ s at $V_{\rm GS} = 10$ and 15 V, respectively).

In the proposed mobility-extraction method, the contact resistance degrades the accuracy of the extracted mobility values. From the y-intercept and slope of the line in the resistance–channel-length plot, we extracted the contact resistance and the channel resistance per unit length as being 19.9 kΩ and 4.7 kΩ/μm at $V_{\rm GS} = 15$ V. Considering that $L = 100$ μm in fabricated devices, the contact resistance is only $\sim$4% of the channel resistance, so the effect of the contact resistance is expected not to be significant in our experiment.

IV. Conclusion

In this letter, we have proposed a mobility-extraction method using the multifrequency C–V method in a-IGZO TFTs. This method does not require long-channel MOSFET equations and can include the effect of subgap states in the extraction of the mobilities. Considering that the subgap states significantly affect the electrical parameters in disordered semiconductor transistors including the a-IGZO TFT, the proposed method is expected to be useful in the extraction of the exact values of the mobility in disordered semiconductor transistors. We have compared the mobility values extracted using the proposed method with $\mu_{\rm avg}$ in Hoffman's method and have found that there are nonnegligible differences between them. Considering that the induced charge is assumed to exist only at the channel/dielectric interface and the effect of the subgap states are not considered in $\mu_{\rm avg}$, this difference confirms the usefulness of the proposed method in the extraction of exact mobilities in a-IGZO TFTs.

References

[1] D. Geng, D. H. Kang, and J. Jang, "High-performance amorphous indium–gallium–zinc–oxide thin-film transistor with a self-aligned etch stopper patterned by back-side UV exposure," *IEEE Electron Device Lett.*, vol. 32, no. 6, pp. 758–760, Jun. 2011.

[2] J.-S. Park, J. K. Jeong, Y.-G. Mo, H. D. Kim, and S. I. Kim, "Improvements in the device characteristics of amorphous indium gallium zinc oxide thin-film transistors by AR plasma treatment," *Appl. Phys. Lett.*, vol. 90, no. 26, pp. 262 106-1–262 106-3, Jun. 2007.

[3] I. Song, S. Kim, H. Yin, C. J. Kim, J. Park, S. Kim, H. S. Choi, E. Lee, and Y. Park, "Short channel characteristics of gallium–indium–zinc–oxide thin film transistors for three-dimensional stacking memory," *IEEE Electron Device Lett.*, vol. 29, no. 6, pp. 549–552, Jun. 2008.

[4] K. Ryu, I. Kymissis, V. Bulovic, and C. G. Sodini, "Direct extraction of mobility in pentacene OFETs using C– V and I– V measurements," *IEEE Electron Device Lett.*, vol. 26, no. 10, pp. 716–718, Oct. 2005.

[5] K. Jeon, C. Kim, I. Song, J. Park, S. Kim, S. Kim, Y. Park, J.-H. Park, S. Lee, D. M. Kim, and D. H. Kim, "Modeling of amorphous InGaZnO thin-film transistors based on the density of states extracted from the optical response of capacitance–voltage characteristics," *Appl. Phys. Lett.*, vol. 93, no. 18, pp. 182102-1–182102-3, Nov. 2008.

[6] S. Lee, S. Park, S. Kim, Y. Jeon, K. Jeon, J. -H. Park, J. Park, I. Song, C. J. Kim, Y. Park, D. M. Kim, and D. H. Kim, "Extraction of subgap density of states in amorphous InGaZnO thin-film transistors by using multifrequency capacitance–voltage characteristics," *IEEE Electron Device Lett.*, vol. 31, no. 3, pp. 231–233, Mar. 2010.

[7] R. L. Hoffman, "ZnO-channel thin-film transistors: Channel mobility," *J. Appl. Phys.*, vol. 95, no. 10, pp. 5813–5819, May 2004.