Monochromatic Photonic Capacitance-Voltage Technique for Donor- and Acceptor-Like Density-of-States over the Full-Energy Range in Amorphous TFTs

Hagyoul Bae[1)], Hyunjun Choi[1)], Sungwoo Jun[1)], Chunhyung Jo[1)], Yun Hyeok Kim[1)], Jaewook Lee[1)], Seonwook Hwang[1)], Euiyeon Hong[1)], Inseok Hur[1)], Jun Seok Hwang[1)], Jaeyeop Ahn[1)], Dae Geun Kim[1)], Bong Sik Choi[1)], Saeroonter Oh[2)], Dae-Hawn Kim[2)], Jonguk Bae[2)], and Dong Myong Kim [1)]

School of Electrical Engineering, Kookmin University, 861-1 Jeongneung-dong, Seongbuk-gu, Seoul, 136-702, KOREA[1)] dmkim@kookmin.ac.kr

Research and Development Center, LG Display, Paju 413-811, KOREA[2)]

Abstract

We report a novel technique for extraction of subgap donor and acceptor density-of-states (DOS) over the full-energy range ($E_C<E<E_V$) by using monochromatic photonic capacitance-voltage (MPCV) technique in n-channel a-IGZO TFTs. In the proposed method, we extract donor- and acceptor-like states ($g_D(E)$ and $g_A(E)$) as the subgap DOS under depletion ($V_{GS}<<V_{FB}$) and accumulation ($V_{GS}>V_{FB}$) bias by employing a sub-bandgap optical source. We obtained $g_D(E)$ and $g_A(E)$ over the full energy range as a superposition of the exponential deep and tail states as well as shallow donor states with N_{TD}=1.0×10^{19} [eV^{-1}cm^{-3}], kT_{TD} =0.16 [eV], N_{DD} = 8.0×10^{16} [eV^{-1}cm^{-3}], kT_{DD} =0.47 [eV], N_{TA}=5.0×10^{17} [eV^{-1}cm^{-3}], kT_{TA} =0.01 [eV], N_{DA} = 8.0×10^{14} [eV^{-1}cm^{-3}], kT_{DA} =0.15 [eV], N_{SD}=1.5×10^{17} [eV^{-1}cm^{-3}], kT_{SD} =0.16 [eV].

I. Introduction

Amorphous Indium-Gallium-Zinc-Oxide (a-IGZO) thin film transistors (TFTs) are known to be prospective devices for possible applications to active-matrix organic light-emitting diode displays (AMOLEDs) and flexible displays due to process at a low temperature, large uniformity, and high carrier mobility [1]. Among electrical properties, experimental modeling and characterization of the subgap density-of-states (DOS) is important to estimate the reliability and stability caused by the fabrication process, layout, and long-term performance associated with robust circuits and systems. There have been works on the analysis and extraction of subgap DOS in a-IGZO TFTs [2-3]. Especially, a quantitative analysis of the subgap DOS for instability under the negative/positive bias illumination stress (N/PBIS) has become a significant issue [4-5].

In this work, we report a technique for extraction of the full-energy range subgap DOS ($g_D(E)$ & $g_A(E)$) by using a capacitance-voltage data under dark and photonic states with subgap optical source ($h\nu=E_{ph}\approx$ 2.6eV$<E_g$) as a monochromatic photonic capacitance-voltage (MPCV) technique. Through the proposed technique, it is possible to extract the full range subgap DOS over the bandgap in the active amorphous semiconductor layer. Using only one-shot C-V measurement as a function of the gate bias (V_{GS}), the subgap DOS can be characterized for the dependence on material, fabrication process, and electrical stress of the active layer. We expect that the proposed method is a powerful tool for characterization of amorphous active layers in TFTs without iteration procedure and/or complicated calculation.

II. Characterization of $g_D(E)$ and $g_A(E)$ over the Bandgap

Fig. 1 shows cross-sectional view and setup for the C-V measurement of n-channel a-IGZO TFTs with an inverted staggered bottom gate. Capacitive equivalent circuit with photo-responsive capacitance ($C_{ph,D}$ and $C_{ph,A}$) are include for the carriers generated from the localized traps in the amorphous active layer. In Fig. 1(a), photo-responsive charges generated from donor-like trap states ($g_D(E)$) are dominant in depletion region ($V_{GS}<<V_{FB}$). Therefore, the measured capacitances under dark state ($C_{D,m}$) [F], photonic state ($C_{P,m}$) [F], and source/drain overlap capacitance (C_{ov}) as a function of V_{GS} can be described as

$$\frac{1}{C_{D,m}(V_{GS})}=\frac{C_{ov}+C_{dep}}{C_{ov}\times C_{dep}} \quad (1)$$

$$\frac{1}{C_{P,m}(V_{GS})}=\frac{(C_{dep}+C_{ph,D})+C_{ov}}{(C_{dep}+C_{ph,D})\times C_{ov}} \quad (2)$$

$$C_{ov}=\left(\frac{C_{IGZO}\times C_{ox}}{C_{IGZO}+C_{ox}}\right)\times 2WL_{ov}\,[\mathrm{F}] \quad (3)$$

with $C_{ox}=\varepsilon_{ox}/T_{ox}$[F/cm^2], $C_{IGZO}=\varepsilon_{IGZO}/T_{IGZO}$[F/cm^2][6], and depletion capacitance C_{dep}. In the depletion (OFF) bias as shown in Fig. 2(a), the channel region is fully depleted under the gate-bias $V_{GS}<<V_{FB}$; the flat band voltage. Also, the capacitance caused by the charges excited from the localized states in the energy range ((E_C-E_{ph})~E_F) is described as

$$C_{ph,D}(V_{GS})=\frac{C_{P,m}\times C_{dep}+C_{ov}\times C_{P,m}-C_{dep}\times C_{ov}}{C_{ov}-C_{P,m}}\,[\mathrm{F}] \quad (4)$$

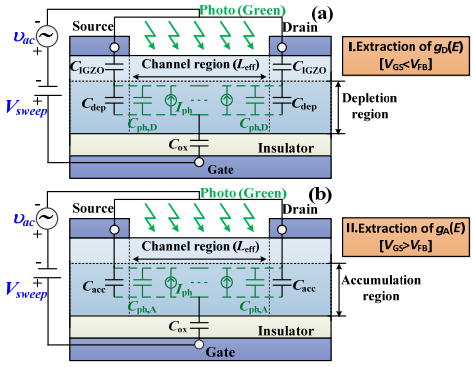

Fig. 1. A cross sectional view and setup for C-V measurement of n-channel a-IGZO TFTs with an inverted staggered bottom gate and equivalent circuit in (a) depletion region ($V_{GS}<V_{FB}$) and (b) accumulation region ($V_{GS}>V_{FB}$).

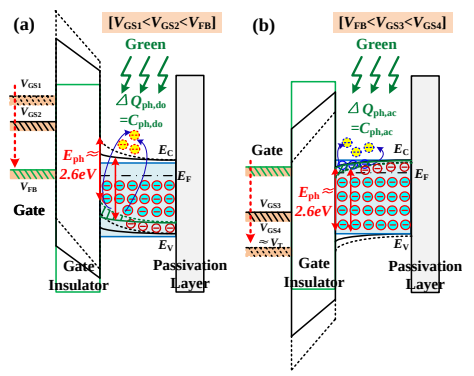

Fig. 2. (a), (b) The energy band diagram for concept of extracting of $g_D(E)$ and $g_A(E)$ in depletion region ($V_{GS}<V_{FB}$) and accumulation region ($V_{GS}>V_{FB}$) under photonic state.

In order to obtain $g_D(E)$ at a specific energy level, the extracted $\Delta C_{ph,D}$ for a differential V_{GS} (or ϕ_S) from experimental C-V data is obtained from

$$\Delta C_{ph,D} = \frac{C_{ph,D}(V_{GS1}) - C_{ph,D}(V_{GS2})}{W \times L_{eff} \times T_{IGZO}} \left[\mathrm{F \cdot cm^{-3}}\right]. \quad (5)$$

Finally, we extract $g_D(E)$ through

$$g_D(E) = \frac{\Delta C_{D,P}}{q^2}\left[\mathrm{eV^{-1}cm^{-3}}\right], (E_i - E_F)(V_{GS1}) < E < (E_i - E_F)(V_{GS2}). \quad (6)$$

We also note that the photo-responsive charges generated from acceptor-like trap states ($g_A(E)$) in the energy range ((E_C-E_{ph})~E_F) are dominant in the accumulation region (V_{GS}>V_{FB}) as shown in Fig. 2(b). Therefore, dark and photonic C-V data can be modeled as

$$\frac{1}{C_{D,m}(V_{GS})} = \frac{1}{C_{ox}} + \frac{1}{C_{acc}(V_{GS})} \quad (7)$$

$$\frac{1}{C_{P,m}(V_{GS})} = \frac{1}{C_{ox}} + \frac{1}{C_{acc}(V_{GS}) + C_{ph,A}(V_{GS})} \quad (8)$$

with the additional capacitance $C_{ph,A}$ for the optically generated charges from localized traps over the energy ((E_C-E_{ph})~E_F). Combining Eq.(7) with Eq.(8), $C_{ph,A}$ [F] can be obtained through

$$C_{ph,A}(V_{GS}) = C_{ox}\left[\frac{C_{P,m}}{C_{ox} - C_{P,m}} - \frac{C_{D,m}}{C_{ox} - C_{D,m}}\right].$$

(10)

For the differential gate bias ΔV_{GS} (or ϕ_S) as a measurement step, we obtain $\Delta C_{ph,A}$ and $g_A(E)$ through

$$\Delta C_{ph,A} = \frac{C_{ph,A}(V_{GS4}) - C_{ph,A}(V_{GS3})}{W \times L_{eff} \times T_{IGZO}} \left[\mathrm{F \cdot cm^{-3}}\right] \quad (11)$$

$$g_A(E) = \frac{\Delta C_{ph,A}}{q^2}\left[\mathrm{eV^{-1}cm^{-3}}\right], (E_F - E_i)(V_{GS4}) < E < (E_F - E_i)(V_{GS3}). \quad (12)$$

III. Experimental Results and Discussion

For the full-energy range subgap DOS by the proposed technique, we measured the capacitance between the gate and source/drain (connected) for n-channel TFTs with an inverted staggered bottom gate. It was measured by the HP4284A precision LCR meter at f=40 kHz for a robust data. The TFT employed for the characterization has the gate dielectric (SiO_X) T_{GI}=200 nm, the active layer T_{IGZO}=50 nm, the gate length L=12 μm, the gate width W=24 μm, and the gate-to-S/D overlap length (L_{ov})=4 μm. Fig. 3 shows that measured C_m-V_{GS} characteristics under dark and sub-bandgap photonic states (E_{ph}≈ 2.6 eV).

We note that the overlap capacitance for the gate-source/drain metal contact region is eliminated and the threshold voltage shift caused by the photovoltaic effect under photonic C-V measurement is also compensated for the proposed technique [7]. Therefore, we can extract the intrinsic subgap DOS only for the active layer. For the energy distribution of $g_D(E)$ and $g_A(E)$, the nonlinear relation between the surface potential ψ_S for the energy level can be obtained from the gate bias-dependent C-V data through

$$\psi_{S,D} = -\int_{V_{GS}}^{V_{FB}}\left(1 + \frac{C_{D,m}}{C_{ox}}\right)dV_{GS}, \psi_{S,A} = \int_{V_{FB}}^{V_{GS}}\left(1 - \frac{C_{D,m}}{C_{ox}}\right)dV_{GS} \quad [\mathrm{eV}]. \quad (13)$$

Fig. 4 shows extracted $g_D(E)$ and $g_A(E)$ from the MPCV can be modeled as a superposition of deep, tail, and shallow states in exponential relations as

$$g_D(E) = N_{DD} \times \exp\left(\frac{E_V - E}{kT_{DD}}\right) + N_{TD} \times \exp\left(\frac{E_V - E}{kT_{TD}}\right) \quad (14)$$

$$g_A(E) = N_{DA} \times \exp\left(\frac{E - E_C}{kT_{DA}}\right) + N_{TA} \times \exp\left(\frac{E - E_C}{kT_{TA}}\right). \quad (15)$$

We obtained characteristic parameters for $g_D(E)$ and $g_A(E)$ over the bandgap as N_{TD}=1.0×10^{19} [eV^{-1}cm^{-3}], kT_{TD} =0.16 [eV], N_{DD} = 8.0×10^{16} [eV^{-1}cm^{-3}], kT_{DD} =0.47 [eV], N_{TA}=5.0×10^{17} [eV^{-1}cm^{-3}], kT_{TA} =0.01 [eV], N_{DA} = 8.0×10^{14} [eV^{-1}cm^{-3}], kT_{DA} =0.15 [eV], N_{SD}=1.5×10^{17} [eV^{-1}cm^{-3}], kT_{SD} =0.16 [eV].

IV. Conclusion

We reported MPCV technique for extraction of the subgap DOS over the full-energy range through the sub-bandgap photo-responsive C-V characteristics of n-channel a-IGZO TFTs. The extracted subgap DOS is fully separated into donor- and acceptor-like states ($g_D(E)$ and $g_A(E)$) by using one-shot C-V measurement. The proposed method can be a powerful tool for a robust characterization of structure-, process-, and stress-dependent variation of the subgap DOS in amorphous semiconductor TFTs without simulation and complicated equations.

Acknowledgements

This work was supported by the National Research Foundation of Korea (NRF) grant funded by the Korea government (MEST) (No. 2010-0013883 and 2009–0080344). CAD softwares were supported by IC Design Education Center (IDEC).

References

[1] Y. Ohta et al., in *Proc. Int. Display Workshop*, 2009, pp. 1685−1688.

[2] H.-H. Hsieh, et al., *Applied Physics Lett.*, vol. 92, no. 13, p. 133503-1, 2008.

[3] C. Chen et al., *IEEE Trans. Electron Devices*, vol. 56, no. 6, pp. 1177−1183, 2009.

[4] Y. Kim et al., *IEEE Trans. Electron Devices*, vol. 59, no. 10, pp. 2689−2698, 2012.

[5] Y. Kim et al., *IEEE Trans. Electron Devices*, vol. 59, no. 10, pp. 2699−2706, 2012.

[6] S. Lee et al., *Solid-State Electronics*, vol. 56, no. 1, pp. 95−99, 2011.

[7] H. Bae et al., *IEEE Electron Device Lett.*, vol. 34, no. 1, pp. 57-59, 2013.

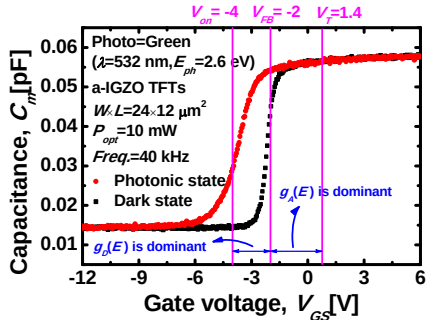

Fig. 3. (a) Measured capacitance-voltage characteristics under dark (black closed symbol) and sub-bandgap photonic states (red closed symbol).

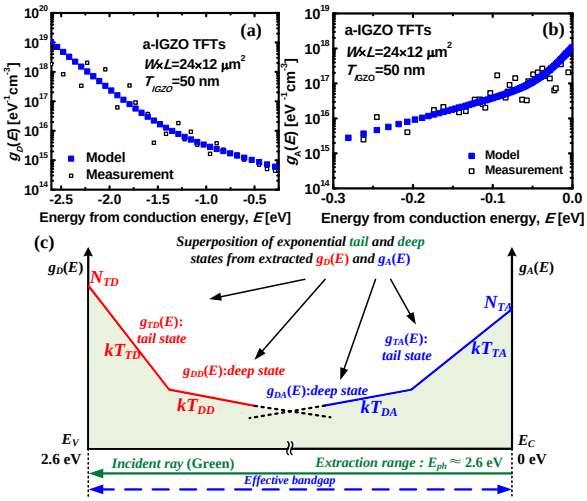

Fig. 4. Energy distribution of extracted subgap DOS ((a):$g_D(E)$, (b):$g_A(E)$) through MPCV method. (black open symbol : measurement, blue closed symbol : model) (c) schematic diagram for energy distribution of subgap DOS in a-IGZO TFTs.